Use & Care Guide
Dishwasher

ASKO D3530
ASKO D3630

ASKO
BUILT TO LAST LONGER

Dear ASKO customer,

Congratulations on your excellent product choice and welcome to the Asko family. A global family with its roots in Scandinavia.

Cleaning results, design, environmental impact on nature and home, user-friendliness, low consumption of time, energy and water, a long life span, reliability.... Good appliances should include all of these. And this is what we try to give you.

When you buy an ASKO product, we want you to feel assured that the inside is as good as the outside and that the ethics and morals on which we built this machine are just as high as the quality and performance you get from it. That is what Scandinavian quality is all about.

In order to get the best possible results from your machine and all its functions, please read this Use and Care Guide before using the machine for the first time. And if you have any questions, please do not hesitate to call us or contact us via our web site.

Best regards from Scandinavia and the people at Asko.

Contents

	Page
Contents	**3-4**
Before using the dishwasher for the first time	**5**
Read through the directions for use	
Take care with certain materials	
Check the door	
Check water hardness level	
Machines with water softener	
Safety	**6**
General	
Winter storage/Transport	
Overfill Protection	
Cleaning	
Packaging materials	
Scrapping	
Child safety	**7**
Child lock	
Certain machines have child safety locks	
Child-safe dishwashing	
Protect your children! Dishwasher detergent is corrosive	
Parts of the dishwasher	**8**
Technical Information	**8**
Baskets	**9**
Control panel	**10**
Dispenser	**10**
Basic course	**11-17**
Filling the baskets correctly	
Dispensing dishwasher detergent	
Selecting programs	
Options	**13**
Delayed start	
Loading the baskets	
Drying	
Express	
Super rinse	
Cool touch	
Eco-dishwashing	**14**
Wash only full loads	
Do not rinse before dishwashing	
Choose environmentally-friendly dishwasher detergent	
Connect to cold water supply	
Special settings	**15-16**
Language	
Child lock	
Buzzer volume	
Water hardness	
Temperature unit	
Machine information	
Resetting the machine	
Fragile dishes	**18**
Fragile decoration	
Crystal/glass	
Silver	
Cutlery with glued handles	
Wood	
Aluminium	
Plastic	
Protect plastic goods	
Standard program	**19-20**
Display	**21**
Cleaning	**22-23**
Coarse filter	
Fine filter	
The outflow pump	
Spray arms	
Door	

Rinse aid **24**
Pour in rinse aid
Select dosage

Salt **25**
Pour in salt

Fault indications **26**

Troubleshooting **27-29**
The dishes are not clean
Stains or a film on the china
The china has a whitish-blue sticky film
Stains on stainless steel or silver
Stains which remain after dishwashing.
Rattling sounds during dishwashing
The machine will not start
Water remains in the machine
Overfilling/leakage
Bad odour in the machine

Performance information **30**

Installation **31-34**
Suggestions on positioning the dishwasher
A. Built-in
B. Freestanding
C. Semi-freestanding
Connection to water supply
Connection to electricity
Drainage connection

Positioning the machine
A. Adjusting machines with six feet (freestanding dishwasher)
B. Adjusting machines with three or four feet
C. Adjusting machines with adjustable foot

Adjusting plinth
(Only if you have a kick-plate as an accessory)

Screw the machine into place

Fitting fixed kick-plate

Fitting the strip seal (to the floor plinth covering plate)
NB! Not all models

Adjusting water softener **35**

Service & Guarantee **36**

Own comments **37-38**

Search words **39**

Quick guide **40**

Before doing your first wash:

Read through the directions for use

Read the directions of use before starting to use your machine, especially the Safety, Child Safety and Basic Course sections.

Take care with certain materials

Read the section ‘Fragile Dishes’ before washing china with unglazed decoration or other household goods made of plastic, wood or crystal requiring careful treatment.

Check the door

Check that the door of the dishwasher fits properly: open the door a little and let it go. Does it stay exactly where you released it? If not, you should check the installation instructions or consult the installer.

Check the water’s hardness

Phone your local Water Board to check the water hardness in your area. This is important when dispensing dishwasher detergent and rinse aid.

If you have a machine with a water softener

Once you know the water hardness, adjust the water softener, see Settings. Before you start dishwashing, you must also fill with salt, see Salt

Safety

General:

• Read and keep the directions for use!
• Installation of water, drainage and electricity must be carried out by a qualified professional.
• Do not use the dishwasher for any purposes other than those stated in these directions for use.
• Do not load the dishwasher door or the dishwasher baskets with anything other than dishes.
• Only use **dishwasher** detergent!
• Place knives and other sharp objects so that they cannot cause injury to people or damage the dishwasher.
• Damaged mains cables must only be replaced by an authorised professional.
• By installation of the unit the supply cord shall be easily accessible.
• The door should not be left in the open position since this could present a tripping hazard.
• The appliance is not intended for use by young children or infirm persons without supervision.

Never put dishes containing solvent residue in the machine due to risk of explosion. Neither may dishes containing ashes, wax or lubricating grease be washed in the dishwasher.

Winter storage/Transport

Store the machine away from frost.
Avoid long journeys in extreme cold. Transport the machine in an upright position or lying on its back.

Overfill protection

The overfill protection starts pumping out water and closes off the water intake if the machine's water level exceeds the normal level. If the overfill protector starts up, shut off the water supply and phone for service. See "Fault indications" on page 26.

Cleaning

When cleaning around the edge of the door, use only a slightly dampened cloth. Do not use a spray bottle! Water can penetrate into the lock and come into contact with the electrical components.

Packaging materials

Sort at source in accordance with the recommendations of your local authority.

Scrapping

When the time comes for the machine to be scrapped, it should immediately be rendered unusable. Remove the plug and cut off the lead as short as possible.

Contact your refuse collection department or your local authority for information on the correct way to dispose of the machine!
The machine is manufactured and labelled for recycling.

Child safety!

Child lock - Control Panel

To prevent children from starting the machine, a child lock can be activated.
Proceed as follows:
1. Switch off the machine at the main switch.
2. Hold in the Set button while pressing the main switch
3. Press the Menu button until “Child lock” appears in the display.
4. Select: **On** with the Set button.
5. Press the Start/stop button
6. Continue with the Menu button until you get back to the main menu or press the Start/stop button.
A key symbol appears in the display if you have activated the child lock.

To deactivate the child lock temporarily when starting the machine, press the Set and Menu buttons simultaneously.
The child lock then comes back on automatically after 3 minutes.
To deactivate the child lock completely, follow the same instructions as when activating it except that you select **Off** instead.

Child safety lock - Door
(not all models)

A child safety lock is fitted to prevent children from opening the door of the dishwasher.
1. Activate the child safety lock by pressing in the door latch and turning the screw slot (up in the left hand corner) to the vertical position with a screwdriver.
2. To open the door, you must press the white plastic latch (illustrated below) to the left at the same time as pressing the catch upwards.
Reset by returning the screw slot to the horizontal position.

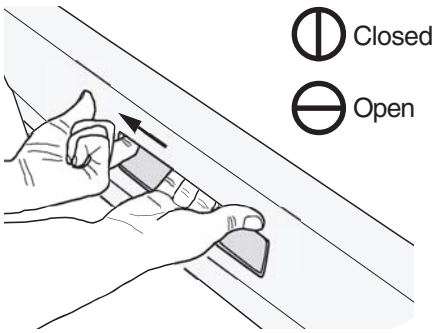

Child-safe dishwashing

• Use the knife basket or knife stand for all long/sharp items.

• Always close the door and start the program immediately once the dishwasher detergent has been added.

• Keep children away from the dishwasher when it is open. There might be the remains of dishwasher detergent present!

• Young children should be supervised to ensure that they do not play with the appliance.

Protect your children! ⚠
- Dishwasher detergent is corrosive!

WARNING: Dishwasher detergents are strongly alkaline. They can be extremely dangerous if swallowed. Avoid contact with skin and eyes and keep children away from the dishwasher when the door is open.

Check that the detergent compartment is empty after completion of the wash cycle.

Store dishwasher detergent and rinse aid out of the reach of children! Should dishwasher detergent be swallowed, immediately drink one or two glasses of milk or water. Do not attempt to induce vomiting. Contact a doctor! Should dishwasher detergent come into contact with the eyes, rinse (for at least 15 minutes) with copious amounts of water.

Parts of the dishwasher*

1. Knife basket
2. Upper basket
3. Lamp
4. Spray arms
5. Lower basket
6. Cutlery basket
7. Rinse Aid Filling
8. Dishwasher detergent compartment
9. Main switch
10. Program panel
11. Filter
12. Type plate

*** Details may differ depending on model and market!**

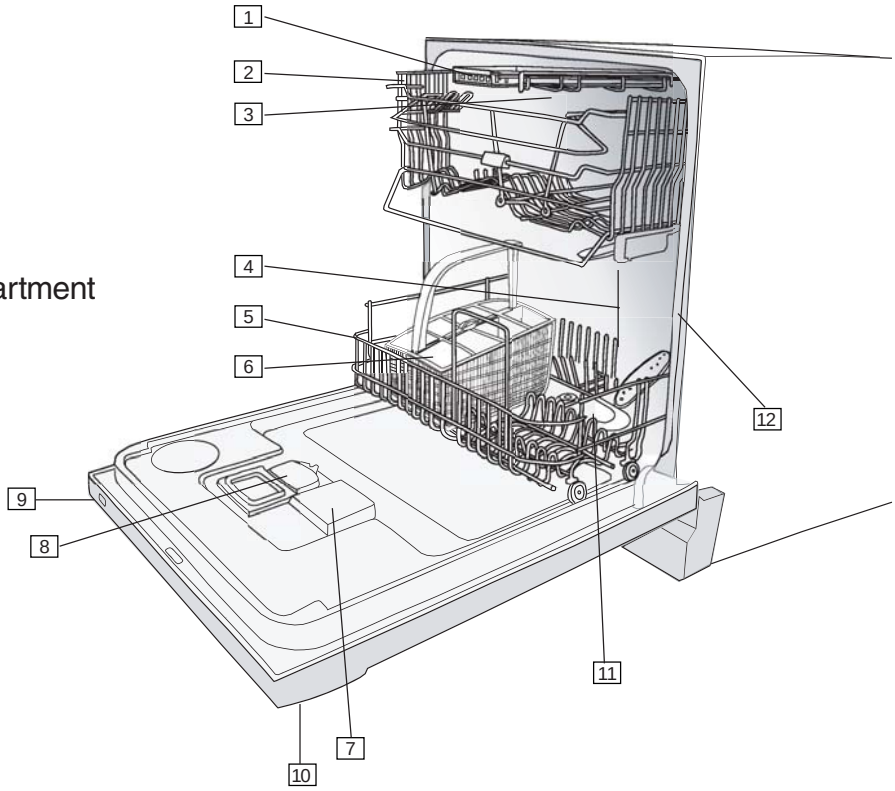

Technical information

Height	820-870mm
Width	596 mm
Depth	550 mm****
Weight	48 kg/51 kg with water softener*
Capacity**	14 place settings
Water pressure	0.03-1.0 MPa (0.3–10 kp/cm^2)
Connection	1-phase, 230 V, 50Hz 10/10A***
Max output***	1900W***
Accessories	Work surface, Side panels, Anti-tilt

* Details may differ depending on model and market!
**In accordance with standard, AS/NZS 2007.
***See type plate.
****Without fitted wooden door.

The baskets*

FLEXIRACKS™

Upper basket

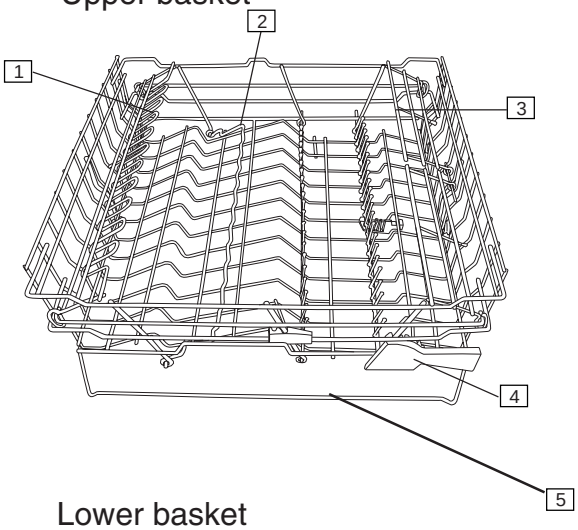

1. Wine glass shelf
2. Folding glass support
3. Divided cup shelves
4. Knife stop
5. China guard
6. Folding plate stand
7. Wine glass shelf (not all models)
8. Folding hatch and handle

***Details may differ depending on the model and market!**

Lower basket

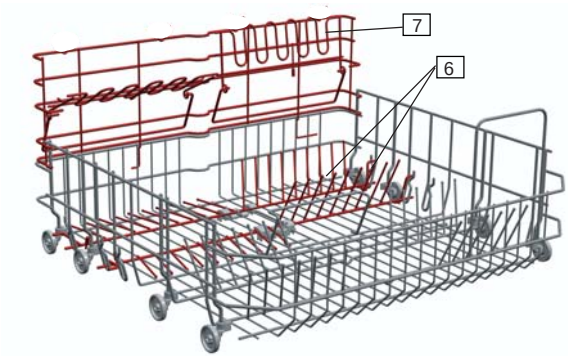

Cutlery basket

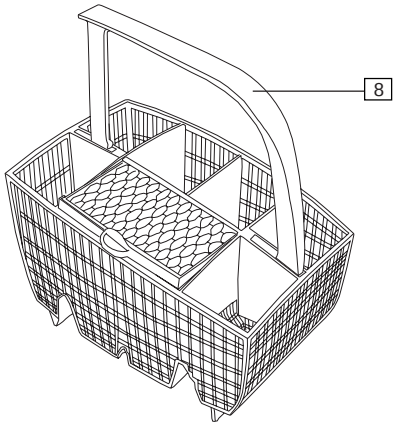

Knife basket

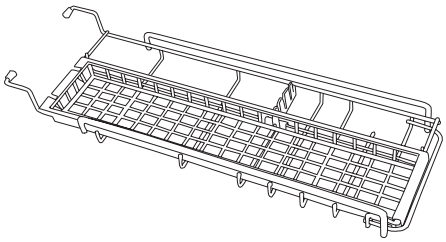

Control panel

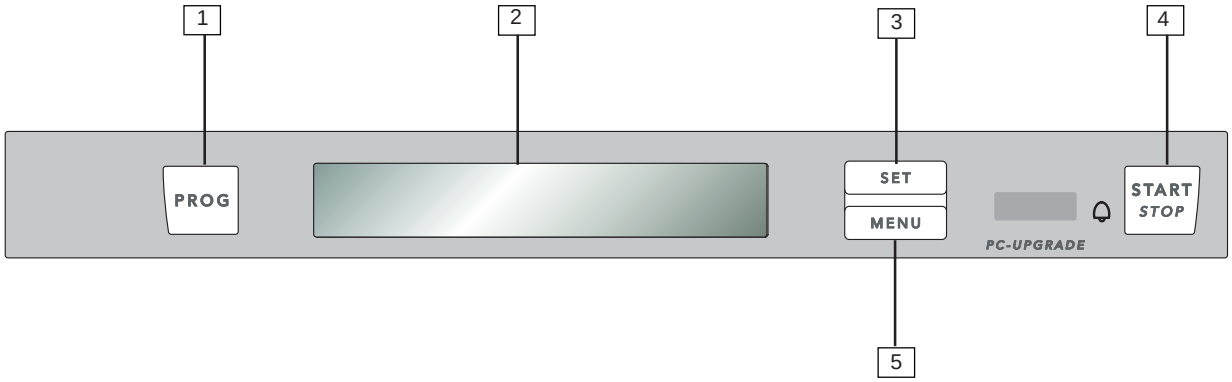

1. Program selector
2. Display window
3. Set
4. Start/stop
5. Menu

Dispenser

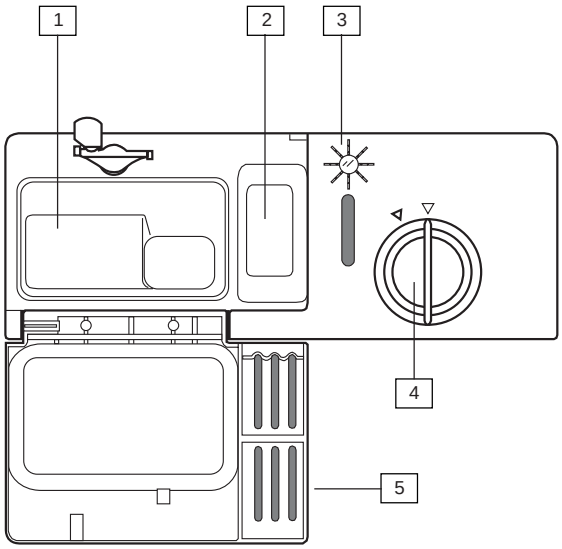

1. Compartment for main wash detergent
2. Compartment for pre-wash detergent
3. Refill indicator rinse aid (not all models)
4. Rinse aid cover
5. Detergent compartment cover

Basic Course

SCS
SUPER CLEANING SYSTEM™

Below are step by step instructions to help you achieve the best possible dishwashing results.

1 Load the baskets correctly!

Your dishwasher has the Super Cleaning System™,which means that you do not need to rinse the dishes under running water before putting them in the dishwasher.

Simply remove large food particles and debris. Convenient and environmentally friendly!

Place glasses, cups, bowls, side plates and dishes in the upper basket, wine glasses should be placed on the shelf with the wavy edge, and knives in the knife stand if present.

NB!

Ensure that all soiled surfaces face inwards or downwards! As depicted.

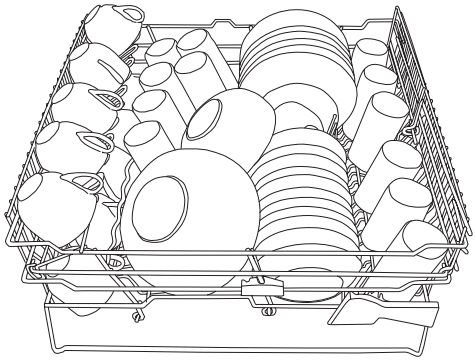

Place dinner plates, side plates, serving dishes, saucepans and cutlery (in the cutlery basket) in the lower basket. The folding rows of extenders available in certain models can easily be folded down to make room for large plates, saucepans and pots.

Stand the cutlery with handles downward and as spread out as possible. Ensure that spoons are not resting inside each other.
Do not put cutlery made of different materials, e.g. silver and stainless steel, in the same compartment (risk of stains).

The cutlery basket has a folding hatch in the middle for small items or narrow shafts, such as electric whisks.

CAUTION ⚠

Knives and other utensils with sharp points must be loaded in the basket with their points down or placed in a horizontal position.

Check that the spray arms are able to move freely.
See Fragile Dishes, if you want to wash articles that may be fragile.

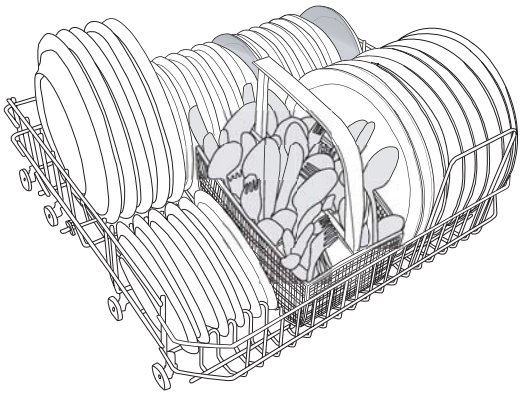

2 Detergent dosage

Detergent should be dosed in accordance with the water's hardness level.
Follow the dosage instructions on the detergent package. If your machine is fitted with a water softener, dose as for soft water.
Pour the dishwasher detergent into the dishwasher detergent compartment. There is one compartment for pre-wash and one for main wash, see Dispenser. Phone the dishwasher detergent manufacturer if you have any questions regarding the detergent.

CAUTION! ⚠

Protect your children!
- Dishwasher detergent is corrosive!

NB!

Only use <u>dishwasher</u> detergent
Detergent for washing by hand cannot be used as the build-up of foam impedes the machine's performance.

3 Press the power main switch and select program

Select a program by pressing the program button one or more times until the required program is displayed.

Auto wash
The dishwasher detects how soiled the dishes are and adjusts water consumption and temperature accordingly.

Heavy wash
The Heavy Wash program should be used for heavily soiled dishes, e.g. saucepans, pots and gratin dishes. If there is still space in the machine after loading such items, you can add plates etc.

Mixed wash
This dishwashing program is used for lightly soiled dishes in the upper basket and heavily soiled dishes in the lower basket.

Upper basket wash
If you only have cups and glasses in the upper basket which require washing, you can use this program.

Lower basket wash
When you only want to wash plates and cutlery in the lower basket you can use the lower basket wash.

Normal wash
Used for washing normally soiled dishes such as plates, serving dishes, cups and glasses, etc.

For washing normally soiled mixed loads use the **Normal wash program** with **65°C** and **normal drying** .
To save more water and energy use 45°C and economy drying.

Delicate wash
If the dishes are not heavily soiled, you can select Delicate wash. This program is intended for glass and china which has just been used and therefore does not need such a powerful program.

Fragile dishes
can be washed using the Delicate wash program. Deselect the drying heat if you want to be particularly careful. See also the chapter on Fragile dishes.

Quick wash
Select Quick Wash if the dishes are very lightly soiled. This program is used for very lightly soiled glass and china, e.g. coffee cups.

Rinse & Hold
For rinsing the dishes while waiting for the machine to be filled.

Rinse & Dry
The Rinse & Dry program comprises a rinse with heat and drying. It is a suitable program if you are planning to make jam and want to rinse and warm previously wash glass jars.

If you wish to use additional options, continue to point 4. Otherwise you can now start the machine, see point 5.

Options

4 Select options

To select options press the Menu button one or more times until the desired option appears in the display window.

Delayed start

If you want the machine to start later, select the delayed start option.
1. By pressing the Set button, you can select a time delay of between 0.5 – 24 hours. The display window shows e.g. 1:30 and a clock symbol will appear when you select a one and a half hour time delay.
2. Confirm the selection by pressing the Menu button and make further choices or press Start.

Loading the baskets

If you have a few dishes that need to be washed, you can choose only to wash the upper or lower basket. It is also possible to select a mixed wash with a few dishes in the upper basket and a large amount in the lower basket.
1. Press the Set button to select ”All baskets”, “Upper basket”, “Lower basket” or “Mixed baskets”.
2. Confirm the selection by pressing the Menu button and make further choices or press Start.

Temperature

The temperature can be changed in all programs except the Auto wash, Rinse & Hold and Rinse & Dry programs.
1. By pressing one or more times on the Set button, you can advance to the desired temperature, from **cold** (incoming water temp.), **30°, 40°, 45 , 50°, 55°, 60°, 65°,70°, 75°C**. In the Delicate wash and Quick wash programs you can only select temperatures up to 60°C.
2. Confirm the selection by pressing the Menu button and make further choices or press Start.

Drying

You can select different drying time lengths depending on how dry you want your dishes to be when the program has finished. The temperature can be selected in all programs except the Auto wash, Rinse & Hold and Rinse & Dry programs.
1. By pressing the Set button you can select ‘Short drying’, ‘Eco drying’ (the drying symbol is shown with **a** wavy line) or ‘Normal drying’ (the drying symbol is shown in the form of **three** wavy lines) .
2. Confirm the selection by pressing the Menu button and make further choices or press Start.

Express

By selecting the Express option, the washing time is reduced and the wash temperature lowered by 10°C. Cannot be used in the Quick wash or Rinse & Hold programs.
1. Using the Set button you can select Express **Off** (the E symbol goes out) or **On** (the E symbol comes on).
2. Confirm the selection by pressing the Menu button and make further choices or press Start.

Super rinse

The Super rinse option adds two extra rinses. The Super rinse option can be used in all programs except the Auto wash, Quick wash, Rinse & Hold and Rinse & Dry programs.
1. Press the Set button to select Super rinse **On** (the Super rinse symbol comes on) or Super rinse **Off** (the Super rinse symbol goes out).
2. Confirm the selection by pressing the Menu button and make further choices or press Start.

Cool touch

If you want the dishes to be cooler for unloading, you can select the Cool Touch option.
1. Press the Set button to select Cool Touch **On** (the Cool Touch symbol comes on) or Cool Touch **Off** (the Cool Touch symbol goes out).
2. Confirm your selection by pressing on the Menu button and pressing Start.

Eco-dishwashing

Only wash with a full load
Put off dishwashing until the machine is full, and in this way you will save energy.

Wash at a lower temperature
If the dishes are only lightly soiled you can select a lower temperature.

Select option Eco drying
To save more energy, use Economy drying. You will get a better drying result if you leave the door slightly open after the end of the program.

Do not rinse before dishwashing
Thanks to the dishwasher's Super Cleaning System™ you do not need to rinse the dishes under running water before loading them into the machine.

Choose environmentally-friendly dishwasher detergent
Read environmental declarations on the package!

Connect to coldwater
If the machine is connected to the cold water, the operating time will be longer, as it takes longer to heat up the water. However, the extended washing time means that it is possible to operate a program with a lower washing temperature and still achieve the same results.

Special settings

Language, Child lock, Buzzer volume, Water hardness, Temperature, Machine information, Reset machine to the original settings

You will probably only need to adjust these settings when the machine is new or if you intend to adapt programs.

To get to the Special settings

1. When you have selected the program and any option, press the Menu button until 'Special settings' appears in the display.

2. Press the Set button and you will now be in special settings.

3. Press the Menu button until the desired setting appears in the display.

Language

Using the Set button, select the language you wish to use. Continue using the Menu button and adjust other settings if required, or press Start/stop if you want to start the machine.

Child lock

Select 'On' with the Set button to activate the child lock. Continue with the Menu button to make further adjustments or press Start/Stop.
To temporarily deactivate the child lock when starting the machine, press Set and the Menu buttons simultaneously.
The child lock comes back on automatically after three minutes.

Buzzer volume

If you wish, the machine will emit a buzzer signal to let you know when it is finished. Adjust the volume with the Set button. Select from 1, 2, 3, 4, 5, 6, 7, 8, 9 and 0 = Off. Continue with the Menu button to make further adjustments or press Start/Stop.

Water hardness (machine with water softener)

Phone your local water board to check the water hardness in your area. The machine is set for low water hardness on delivery. Set the desired hardness with the Set button. Select from 1, 2, 3, 4, 5, 6, 7, 8, 9 and 0 = without water softener as well as machines with water softener and low hardness.
Continue with the Menu button to make further adjustments or press Start/Stop.

No.	°dH	°fH
0	0-5	0-9
1	6-8	9-14
2	9-11	15-20
3	12-14	21-25
4	15-19	26-34
5	20-24	35-43
6	25-29	44-52
7	30-39	53-70
8	40-49	71-88
9	50+	89+

Temperature

Using the Set button, choose if the temperature is to be displayed in °C or °F. Continue with the Menu button to make further adjustments or press Start/Stop.

Machine information

By pressing the Set button, you can see how much water the machine used the last time it was operated. You can also see how many times it has been used since it was new.

To exit Special settings

Press the Menu button or Start/Stop.

Resetting the machine

Switch off machine at the main switch. Hold in the Program button while pressing the main switch The machine will reset itself to the original settings (with the exception of water hardness and language).

5 Press Start and close the door.

The dishwasher will now start. It manages the entire wash automatically. Ensure that the door is properly closed or the machine will not start.
The display shows ‘Program started’. If the door is open or not properly closed, ‘Close door’ appears in the display.

Changing options

If you wish to change the program after having started the machine, press the Start/Stop button for three seconds. Then select a new program and press the Start/Stop button again.

Do you want to load more dishes?

Open the door slowly; the machine stops automatically, put in the dishes, close the door and the dishwasher will continue from where it left off.

If the machine is switched off at the main switch

(or in the event of a power cut) before the washing program has been completed, the interrupted program will continue when the power comes back on.

NB!

If the power is switched off, or if the door is open for more than 2 minutes during drying, the program is interrupted.

6 After dishwashing

When the program is finished, End appears next to the Start/Stop button. Should you wish to disconnect the current completely, just switch off at the main switch. Turn off the water tap if the machine is not to be used for an extended period, e.g. during holidays.

Advice!

For even quicker drying, allow the door to stand slightly ajar.

Fragile dishes

A number of household goods are not suitable for machine washing. There can be many reasons for this. Certain materials cannot withstand intense heat, others can be damaged by the dishwasher detergent.

Fragile decoration

China with decoration on top of the glaze (the article has a rough feel) should not be machine washed.

Crystal/glass

Place the articles so that they do not knock together during the wash. Use the lowest possible wash temperature and the shortest possible program. No Drying Heat! Antique and very fragile items should not be machine washed.

Glass which is machine washed at high temperatures can in time develop a grey film which cannot be removed. Wash fine glass at the lowest temperature and with a low dosage of dishwasher detergent.

Silver

Silver and stainless items should not come into contact with each other as the silver can discolour.

Cutlery with glued handles

Certain types of adhesive cannot withstand machine washing. In such cases the handles can come loose.

Wood

Wooden articles should only be machine washed if they are labelled as dishwasher proof.

Aluminium

Aluminium can be dulled by machine washing. However, good quality aluminium saucepans can be machine washed, although a reduction in lustre should be expected.

Plastic

Certain types of plastic cannot withstand the high temperature generated in machine dishwashing.

To protect plastic articles

Select program with low temperature, 50°C and Eco drying.

Standard program

Program	Option		Program procedure					Consumption			Time	
								Energy kWh		Water	Min. (appr.)	
	Temp. °C	Drying	Pre-wash	Main wash °C	Rinses	Final rinse °C	Fan	Cold water (20°C)	Warm water (60°C)	Litres	Cold water (20°C)	Warm water (60°C)
Auto wash	_	_	0 / 1	40-60	2 / 3	60	X	0,8-1,4	0,7-1,0	38245	115-185	95-160
Heavy wash	70	Normal	2	70	3	70	X	1,7	0,9	18	195	170
Normal wash	65	Normal	2	65	2	70	X	1,5	0,8	15	140	120
Normal wash *	45	Eco	-	45	2	45	X	0,6	0,3	13	100	85
Upper basket	45	Eco	-	45	2	45	X	0,6	0,3	10	90	75
Delicate wash	55	Eco	-	55	2	55	X	1,0	0,6	9	105	90
Quick wash	55	Eco	-	55	2	-	-	0,7	0,5	8	85	75
Quick wash	30	Eco	-	30	2	-	-	0,1	0,1	8	20	15
Rinse & dry	-	Normal	-	-	1	55	X	0,5	0,4	3	45	40
Rinse & hold	-	-	-	-	1	-	-	0,01	0,01	3	4	4

* Tested program for Standard AS/NZS 2007.1:2003

**All quoted times are only indicative, fluctuations may occur.

Due to water temperature, water pressure, variations in voltage etc.

Hot water connection approx. 60°C.

Cold water connection approx. 15°C.

Empty for printing reasons

The display

When you have selected program and option, the display shows the length of time the program took the last time it was used. When you have started the machine, the display window shows an approximate duration.
This time can vary a little from one occasion to another depending on the temperature of the inlet water, the amount of dishes, the ambient temperature, etc.
During the time the program is operating, the remaining program time is shown in the window. The remaining time is shown e.g. as 1:02, which means that 1 hour and 2 minutes of the program remain.

NB!

During the first run of each program, the remaining time display can be slightly misleading as the machine is estimating the time. If the program takes longer than expected, it displays 1 minute until the program is finished. There is no need to call for service it is merely an indication that the machine is working correctly.

Cleaning

Cleaning

The dishwasher's inner container is made of stainless steel and is kept clean through normal use. However, if you have calciferous (hard) water, lime deposits can form in the dishwasher. In this case, run a normal wash program with two tablespoons of citric acid in the dishwasher detergent compartment.

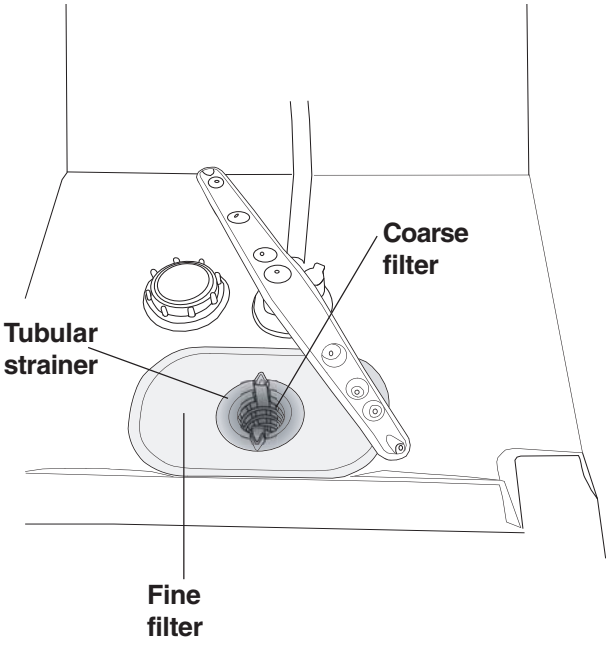

Coarse filter

The coarse filter collects large food particles which cannot get past the outflow pump. Lift out and empty the coarse filter as necessary. Don't forget to replace it!

Fine filter

After 300 dishwashing cycles, 'Clean filter' appears in the display (applies only to certain models and markets).

1. The fine filter is removed by first turning the tubular strainer of the filter anti-clockwise and then lifting it straight up.
2. Clean with a dishwashing brush. Ensure that the edges are properly sealed when replacing the fine filter.

The message is cancelled by pressing on one of the buttons or the main switch.

Drain pump

The pump can be accessed from the inside of the machine.

1. Always remove the plug from the wall socket before you clean the pump.
2. Remove the coarse screen first by pressing together the two lugs and pulling the screen upwards.
3. Now loosen the tubular part of the screen by turning it anticlockwise and removing the fine screen.
4. Finally remove the small adapter to the left of the bottom drain.
5. It's possible, by inserting your finger in the hole, to turn the pump impeller and remove any blockage.
6. Refit the adapter and screens.
7. Insert the plug in the wall socket.

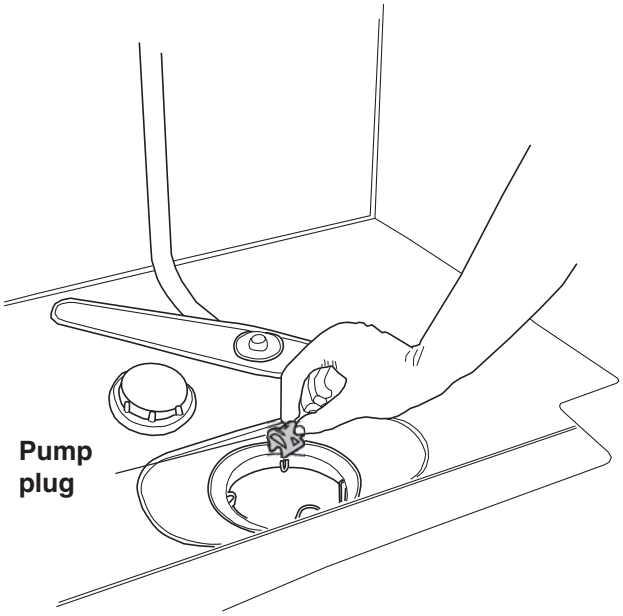

If you still cannot start the machine and a humming noise can be heard, then the over-filling protection has been activated.
• Shutoff the water
• Remove the plug from the wall socket
• Call Service

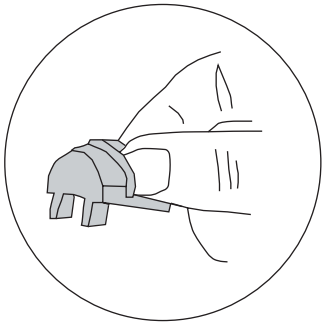

CAUTION! ⚠

Do not forget to replace the pump plug.

Spray arms

The holes and bearings can occasionally become clogged.
1. Pull the lower spray arm straight up to release it.
2. Scrape away the debris with a needle or similar. The spray arms also have holes on the underside.

To release the upper spray arm, the upper basket must be removed.
3. Pull out the basket and turn the basket stop outwards on both rails (see picture). The basket can now be removed.
4. Remove the upper spray arm in the same way as the lower arm and clean it.

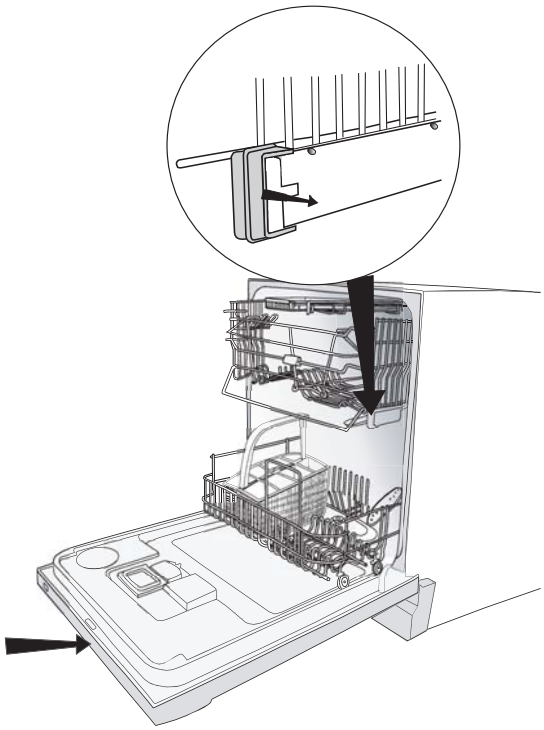

The door

When cleaning the edge around the door, use only a slightly damp cloth, possibly with a little detergent. Do not use a spray bottle or similar around the door catch. This is to ensure that water does not penetrate into the door catch and come into contact with the electrical components.

CAUTION! ⚠

Do not use a spray bottle or similar around the door catch.

Tip!
In order to prevent bad odours in the dishwasher, clean the strips and corners with a dish brush and low-lather detergent.

Rinse aid

Pour in rinse aid

Drying proceeds more quickly if you use rinse aid.

Machines with indicator on the panel

When the rinse aid has run out and more is needed, the rinse aid symbol on the panel lights up*.

To fill with rinse aid:

1. Turn and lift up the cover of the rinse aid compartment to the right of the dispenser. This is where you top up and set the amount of rinse aid to be dispensed in each wash.
2. Carefully pour in rinse aid up to the knob for dosage setting.

Alter dosage if required. Do not forget to close the cover.

***NB!**

After filling there may be a short delay before the signal light goes out.

Machines with refill indicator

There is a refill indicator in the middle of the dispenser (see picture). If the refill indicator is totally black, there is sufficient rinse aid. However, if the indicator has a more transparent appearance, you need to top up with rinse aid (see above).

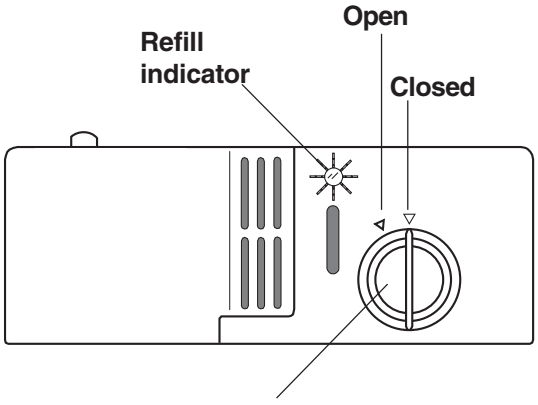

Rinse aid cover
Open by turning and lifting the cover!

Select dosage

The dispenser is usually set at 1= soft water. However, depending on the water hardness you may need to change the dosage.

Open the rinse aid cover . Here you will find the dispenser's adjustment dial. Settings 1-6: the harder the water, the higher the dosage.
When the water hardness exceeds 10-12 °dH you should use rinse aid with citric acid (acid rinse aid) if the machine does not have a water softening filter. If the dishwasher has a water softening filter, dispense as for soft water.

Too much rinse aid can lead to the build-up of foam. If you have particularly soft water, you can dilute the rinse aid (1 part rinse aid, 1 part water).

Too much rinse aid can cause streaks on the dishes, while too little can result in water stains.

Salt (applies to dishwashers with water softeners)

Add salt

Before using a dishwasher with a water softening filter, you must fill the salt compartment with salt. Use coarse salt or special salt for dishwashers.

It is best to fill with salt when you are about to do a wash, as the dishwasher needs to be rinsed out immediately after filling. Proceed as follows the first time:

1. First unscrew the cover as illustrated.
2. Place the funnel, which is supplied with the dishwasher, into the compartment's filler hole.
3. First pour in approximately 1 litre of water. Then fill the compartment with max 1.5 kg salt.
4. Wipe away excess salt so that the cover can be properly screwed into place.
5. Run a Normal wash program so that any salt in the machine is rinsed away.

When the salt runs out, the salt symbol on the display* lights up (this function is not available on all machines). Unscrew the cover and fill the compartment with salt. Water is only needed on the first occasion! Wipe clean and screw back in place. Run a Normal wash program so that any salt is rinsed away.

The indicator is not working

If the indicator is not working, this may be because the float, which is positioned under the cover, has become stuck in salt residue. The float can be reached through the green arm located under the cover of the salt compartment.

1. Move the float arm up and down.
2. When the float is freed, move the arm to its lowest position.

Models without a salt symbol in the display show green in the salt compartment cover when there is sufficient salt.

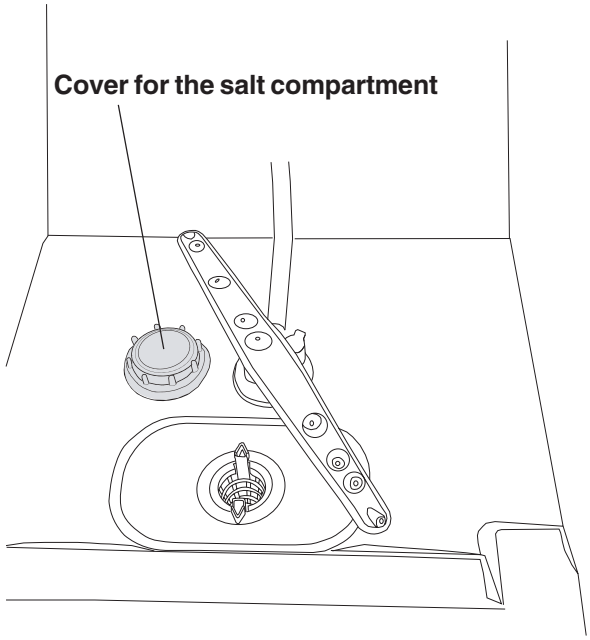

***NB!**

After filling, there may be a short delay before the signal light goes out.

CAUTION! ⚠

Never pour dishwasher detergent into the salt compartment. It will destroy the water softener!

Fault indications

Display	Type of fault	Action
Overfilling	Too much water in the machine	Phone for service
Water inlet fault	Fault in the water inlet	Check that the tap is open
Inlet valve leakage	Inlet valve leakage	Shut off the tap and phone for service
Drainage fault	Blocked drain	See ‘Possible causes’ in chapter **Troubleshooting**
Blocked filter	Clogged filter	Clean filters, see chapter **Cleaning**

To remove the fault indications from the display, turn off the main switch and then turn it back on again.

Troubleshooting

Problems	Possible causes	Action
The dishes are not clean.	• The spray arms are not rotating.	• Lift off the arms and clean.
	• Old dishwasher detergent. NB! Detergent is a perishable.	• Avoid large packs.
	• Incorrect dosage of detergent.	• Dispense according to the level of water hardness.
	• Insufficiently powerful dishwashing program.	• Select the Temperature normal option or switch to a more powerful program.
	• Incorrect program chosen.	• Change to a more intensive program.
	• Incorrect loading of the dishwasher.	• Do not cover china with large bowls or similar. •Avoid placing very tall glasses in the corners of baskets.
	• Glasses and cups have tipped over during the wash.	• Load the china securely.
Stains or a film on the china.	• Dishwasher fitted with water softener is leaking salt.	• Check that the cover of the salt compartment is properly screwed on. Otherwise phone for Service.
	• Incorrectly set water softener.	• See the chapter on water softeners.
	• Incorrectly set rinse aid dispenser.	• See the chapter on rinse aid.
	• The salt compartment is empty.	• Top up with salt.
	• Phosphate-free detergent in combination with hard water.	• Change detergent.
	• Too high a temperature and/or too much detergent can cause etching on (crystal) glass. Unfortunately this cannot be remedied, only prevented!	• Wash (crystal) glass at a low temperature and dispense dishwasher detergent with care. Contact the dishwasher detergent manufacturer.

Problems	Possible causes	Action
The china has a whitish-blue sticky film.	• Too high dosage of rinse aid.	• Reduce dosage. See the chapter on rinse aid. If the water is very soft, you could try diluting the rinse aid (1 part rinse aid, 1 part water).
Stains on stainless steel or silver.	• Certain food remnants such as mustard, mayonnaise, lemon, vinegar, salt and dressings can cause stains on stainless steel if allowed to remain for any length of time. All stainless steel can mark silver if allowed to come into contact during the dishwashing process. Aluminium can also cause stains on dishes.	• Rinse off food residue of this type if you do not intend to start the dishwasher immediately. • Seperate your cutlery into the varians compartments in the basket. Make sure silver and stainless steel are not together.
Stains which remain after dishwashing.	• Lipstick and tea can be difficult to remove.	• Change to a detergent with bleach.
Rattling sound during dishwashing.	• The dishes are not properly loaded or the spray arms are not rotating.	• Check that the china is loaded securely. Spin the spray arms to make sure that they rotate.
The machine will not start.	• You have forgotten to switch on the main switch.	• Check
	• The door is not properly closed.	• Check
	• A fuse has blown.	• Check
	• The plug is not plugged in.	• Check
To restart the machine, press Start/stop for 3 seconds. Now select a new programme and press Start/stop.	• The water tap is off.	• Check
	• Overfilling/leakage	
	• A droning sound (drainage	1. Close the water tap.

Problems	Possible causes	Action
	pump) can be heard from the machine, this does not stop when the power is switched off using the main power switch.	2. Pull out the plug. 3. Call a service engineer
Water remains in the machine.	• Obstruction in the drain hose.	• Disconnect the drain hose where it is connected to the sink's water trap. Check that no debris has become stuck. Is the cone-shaped part of the pipe cut so that the diameter is at least 16 mm?
	• Kinks in the drain hose.	• Check that the hose is free from kinks or sharp bends.
	• The filters are clogged.	• Clean out the coarse filter, the fine filter and the filter.
	• Items in the drain pump.	• Clean out the drain pump. See chapter on cleaning
Bad odour in the machine	• Dirt along the strips and in corners	• Clean with a dish brush and low-lather detergent.
The dishes are not sufficiently dry	• Drying power too low. The machine is not fully loaded. The rinse aid has run out or the set dose is too low.	• Activate the Normal drying option (not all models). Put a full load in the machine. Replenish rinse aid or increase the dose of rinse aid. Open the door slightly once the program has finished.

Performance information

Test dosage

Heavy wash/Normal wash

Main wash 25 gram Standard detergent.
Rinse aid dosage 3.

Energy labelling

Australia:	AS/NZS 2007
Dishwasher program:	
Normal wash 45°C Eco drying	
Program time:	100 minutes.
Connection:	Cold water
Test method noise measurement:	IEC-704-3

Example of dishwasher loading

AS / NZS 2007.1:2003

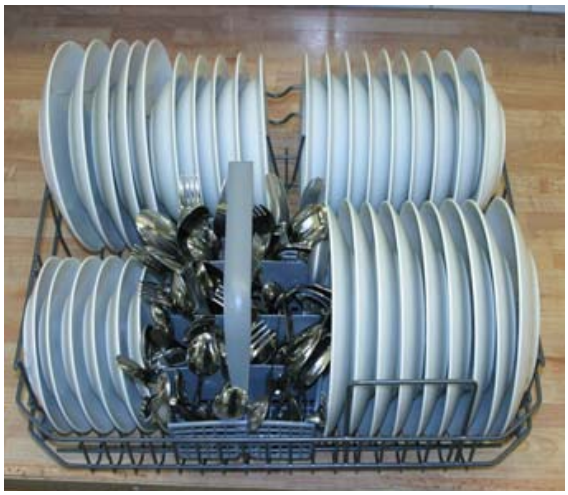

AS / NZS 2007.1:2003

Technical information

Height:	820-870 mm
Width:	596 mm
Weight:	48 kg*
	51 kg with water softener*
Capacity:	14 IEC place settings
Water pressure:	0.03-1.0 MPa
	0.3-10 kp/cm^2 (Bar)
	3-100 N/cm^2
Connection:	See type plate
Output:	See type plate

*The weight can vary due to varying specifications.

Installation

Suggestions on positioning the dishwasher

The dishwasher can be built in, fully free-standing or semi-freestanding.

CAUTION! ⚠

Connection to electricity, water and drainage must be carried out by a suitably qualified person.

A. Built-in

The dishwasher can be built in under a work surface with a working height of 820-870 mm. The width measurement must be at least 600 mm. For more measurements see picture.

B. Freestanding

A freestanding dishwasher must be fitted with anti-tilt. This comprises two fastening irons which are screwed into place as illustrated.
The dishwasher is then pushed in so that the fastening irons grip onto the rear feet. The dishwasher cannot now tilt in the event a load is placed on the open door. If the dishwasher is to be fully freestanding, both side panels and the work top should be fitted. These accessories can be purchased where you purchased the dishwasher.

Tip!

A machine with side panels and a counter top (freestanding) can, of course, also be installed as a built-in unit.

C. Semi-freestanding

If the dishwasher is positioned so that either side is visible, a side panel can be fitted.
These accessories can be purchased where you purchased the dishwasher.

Built-in installation

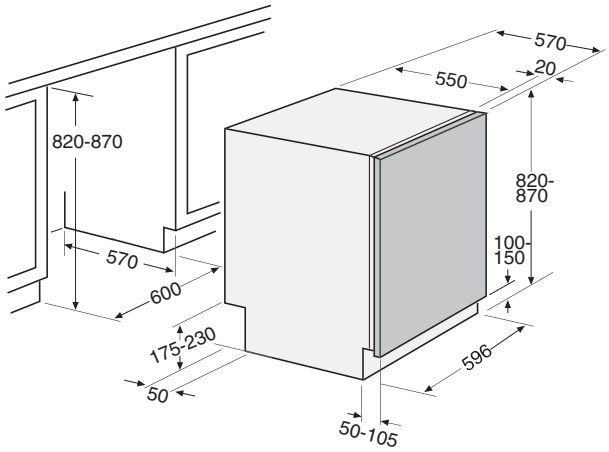

Freestanding installation

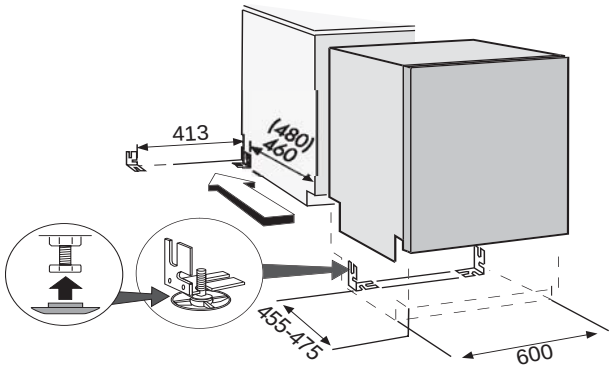

CAUTION! ⚠

A fully freestanding dishwasher must be fitted with anti-tilt.

NB!

The air outlet must not be blocked.

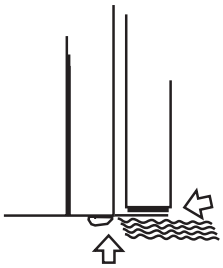

Connection to water supply

There must be a shut-off tap on the water supply pipe. The shut-off tap should be positioned above the work surface or at the front of the sink unit.

The water supply pipe has a connection with a 1/2” or 3/4” internal thread depending on country.

When the installation is complete, the shut-off tap should be opened to allow the pressure to settle for a while and to check that all connections are tight.

NB!

It is recommended that connection should be to cold water.

Connection to electricity

A dishwasher fitted with a lead and plug must be connected to an earthed socket. Repairs and maintenance relating to safety or performance must be carried out by a qualified professional.

Technical data

See the type plate on the right hand side of the door.

Connection to drainage

NB!

The hose must be fastened level with the underside of the work surface.

CAUTION! ⚠

The lead must be disconnected or the socket voltage-free while the work is carried out!

Connection to drainage

When the drain hose is routed to a connection nipple at the sink’s water trap (see illustration 1), note that the hose must be fastened level with the underside of the sink unit – otherwise the dishwater from the sink can run down into the dishwasher. The drain hose is threaded onto a cone-shaped connecting pipe at the sink unit’s water trap. The cone-shaped pipe must be cut to an internal diameter of at least 16 mm. For other alternative connections, see illustrations 2 and 3.

The drain hose may be lengthened by a maximum of 3 m (the total length of the drain hose may not exceed 4.5 m). Any connections and connecting pipes must have an internal diameter of at least 16 mm. However, the drain hose should ideally be replaced with a new hose without joins.

No part of the drain hose may be more than 950 mm above the bottom of the machine. The hose must not be routed directly to the floor drain or similar. In such cases, the hose can act as a siphon and empty the dishwasher.

The hose must always discharge at least 350 mm above the bottom of the machine.

Illustration 1

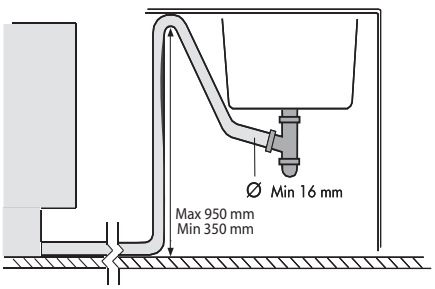

Illustration 2

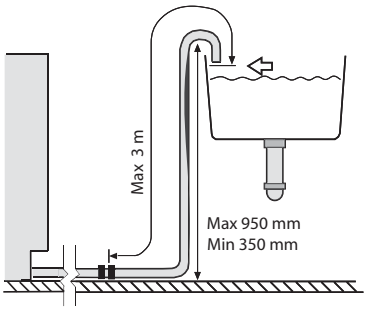

Illustration 3

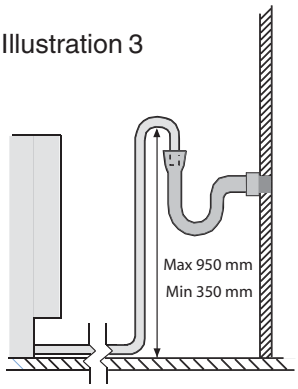

Positioning the machine

A. Adjusting machines with 6 feet (freestanding dishwasher)

1. Adjust the height of the dishwasher with the four steel feet.
2. Lock the feet with the nuts.

NB! The dishwasher must not be allowed to lean more than 5 mm.

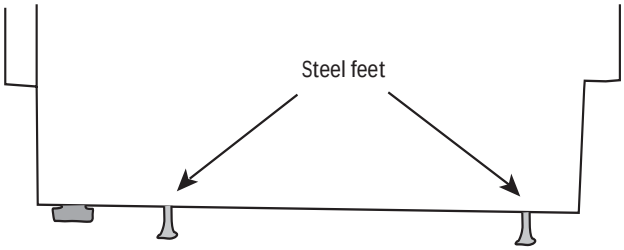

3. After the steel feet have been adjusted, screw down the two rubber feet tightly against the floor.

The rubber feet now work as anti-tilt protection.

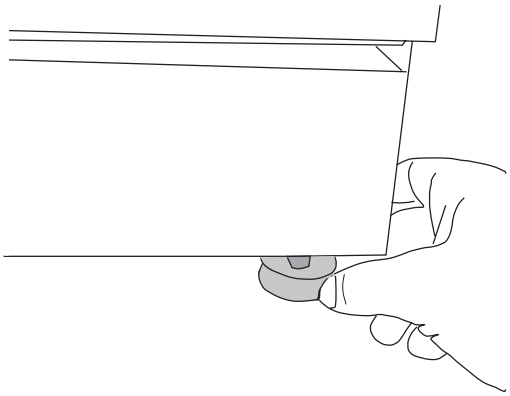

B. Adjusting machines with three or four feet

1. Start by measuring the height from the floor to the underside of the work top of your kitchen bench.
2. Install the sliding feet on the dishwasher.

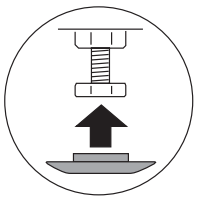

3. Measure the height from the floor to the top edge of the dishwasher.
4. Adjust all the feet by screwing them clockwise to raise or anti-clockwise to lower.
5. Check that the height of the machine corresponds to the height from the floor to the underside of the work surface. Tighten the locking nuts (locking nut) on the rear feet.
6. Push the dishwasher into place.
7. Finely adjust the front feet (the machine may lean max. 5 mm) and tighten the locking nuts.

C. Adjusting machines with adjustable foot

1. Start by measuring the height from the floor to the underside of the work surface.
2. Install the sliding feet on the dishwasher.

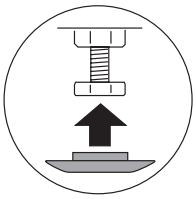

3. Measure the height from the floor to the top edge of the dishwasher.
4. Tilt the dishwasher forward a fraction and roughly adjust the rear foot by screwing the set screw at the front clockwise to raise or anti-clockwise to lower (illustrated below). Use a broad screwdriver or a hexagonal head screwdriver.
5. Adjust the front feet by turning them clockwise to raise or anti-clockwise to lower.
6. Check that the height of the machine corresponds to the height from the floor to the underside of the work surface.
7. Push the dishwasher into place.
8. Finely adjust the feet (the machine may lean max. 5 mm) and tighten the locking nuts on the front feet.

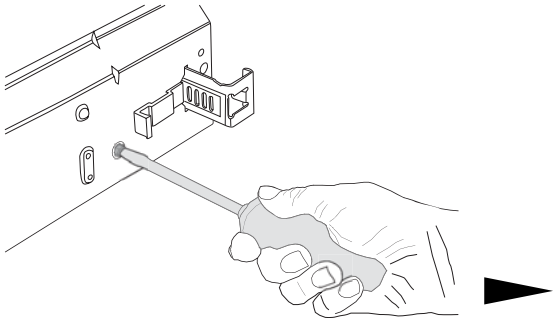

To prevent kinks, pull the drain hose and the connecting pipe.

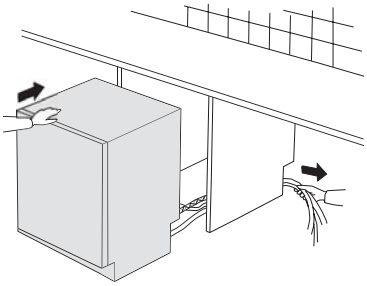

Adjusting the plinth (Only if you have kick-plate as accessory)

The dishwasher has two kick-plates (some models).
The upper kick-plate should be used if the machine is to be 850 - 870 mm tall and the depth of the plinth can be varied between 45 - 105 mm. The lower one is used if the dishwasher is to be 820 - 845 mm tall with a plinth depth of between 50 - 105 mm. Attach the enclosed felt insulation to the kick-plate (some models).

Set the correct plinth depth as follows:

1. Slide the grey catches towards each other and pull out the holders as far as required. Slide in the catches so that they lock the holders in place.
2. Hang the kick-plate onto the holders by inserting it into the grooves.

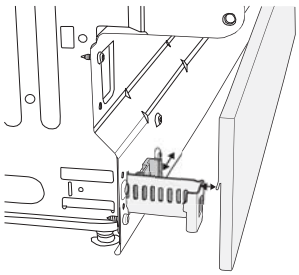

Screw the dishwasher into place

The enclosed plastic plugs are used for covering the screw holes if the dishwasher is to be screwed at the sides. After fixing check that the front feet are in contact with the floor.

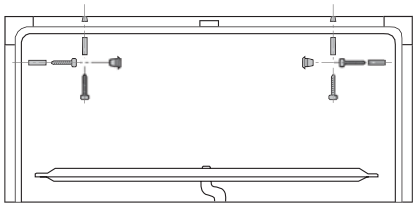

Fitting fixed kick-plate

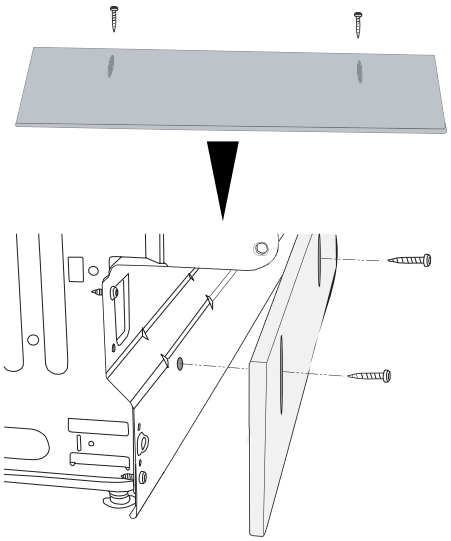

Fitting strip seal

(to the floorplinth's covering plate)

Proceed as follows:

1. Remove the plastic plinth by gripping with both hands under the plastic plinth (A), and break outwards and upwards.

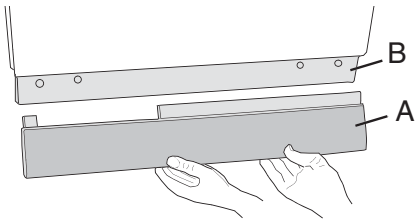

2. Undo the two screws on the covering plate (B).
3. Glue the accompanying rubber strip (C) to the underside of the covering plate (against the floor).
4. Screw the covering plate back into place. Adjust the covering plate so that the rubber strip is just in contact with the floor.

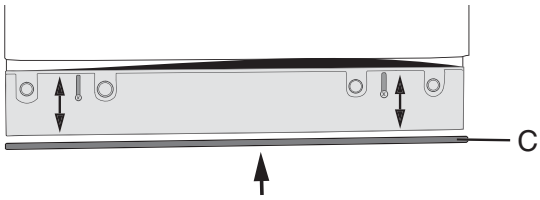

5. Replace the plastic plinth

Setting water hardness (machines with water softener)

Before starting to use the dishwasher, you should set the correct water hardness. Phone your local water board to ascertain the water hardness in your area. The machine is set for low water hardness on delivery.

1. Turn on the dishwasher with the main switch.

2. Press the Menu button until ‘Special settings’ appears in the display.

3. Press the Set button. You are now in the special settings menu.

4. Press the Menu button until ‘Water Hardness’ appears on the display.

5. Set the desired hardness with the Set button. Select from 1, 2, 3, 4, 5, 6, 7, 8, 9 and 0 = without water softener as well as machines with water softener and low hardness.

No.	˚dH	˚fH
0	0-5	0-9
1	6-8	9-14
2	9-11	15-20
3	12-14	21-25
4	15-19	26-34
5	20-24	35-43
6	25-29	44-52
7	30-39	53-70
8	40-49	71-88
9	50+	89+

6. Press the Menu button to confirm the setting.

Service & guarantee

Service

Before calling for service, check to see whether the faults are due to something that you can rectify yourself. See Trouble shooting pages **27-29**.

Guarantee

For guarantee details, see the guarantee card.

Own comments

Own comments

Search words

A

Adding salt 25
Advice 17
After dishwashing 17

C

Child-safe 7
Citric acid 22, 24
Cleaning 6, 22, 28
Connection 31, 32
Control panel 10
Crystal 5, 18
Cutlery basket 9

D

Delicate wash 12
Dishwasher detergent 6, 7, 11, 25
Display 21
Door 6, 17, 23
Drainage 22, 28, 31, 32

E

Environment 11, 14

F

Fault indications 6, 26

G

Guarantee 36

H

Hardness level 5, 24
Heavy wash 12

I

Installation 31

K

Knife basket 8, 9

L

Loading baskets 11, 40
Lower basket 8, 9, 12

M

Main switch 8, 12, 17, 40

N

Normal Wash 12

P

Plastics 5, 18
Plinth 34

Q

Quick Guide 36
Quick wash 12

R

Recycling 6
Rinse & Hold 12
Rinse aid 5,10, 24, 26

S

Salt 5, 25, 26
Select Program 12, 14, 18, 40
Service 6, 26, 36
Settings 5, 15, 16
Spray arms 11, 23, 26, 40
Stains 26, 29
Standard program 19, 20

T

Temperature 13, 14, 15
Transport 6

U

Upper basket 8, 9, 12

W

Washing fragile items 12
Water 14, 24, 26, 31, 32
Winter storage 3, 6

Quick Guide

SCS
SUPER CLEANING SYSTEM™

1. Loading baskets

Remove large food particles and debris. There is **no** need to rinse thanks to the Super Cleaning System™.

2. Dispensing dishwasher detergent

The detergent compartment has a small compartment for pre-wash and one for main wash.

3. Ensure that the spray arms can rotate freely

4. Turn on the main switch

5. Select program and press start

For washing normally soiled mixed loads use the **Normal wash program** with **65°C** and **normal drying** .
To save more water and energy use 45°C and economy drying.

6. Close the door

Program	Option		Program procedure				
	Temp. °C	Drying	Pre-wash	Main wash °C	Rinses	Final rinse °C	Fan
Auto wash	_	_	0 / 1	40-60	2 / 3	60	X
Heavy wash	70	Normal	2	70	3	70	X
Normal wash	65	Normal	2	65	2	70	X
Normal wash *	45	Eco	-	45	2	45	X
Upper basket	45	Eco	-	45	2	45	X
Delicate wash	55	Eco	-	55	2	55	X
Quick wash	55	Eco	-	55	2	-	-
Quick wash	30	Eco	-	30	2	-	-
Rinse & dry	-	Normal	-	-	1	55	X
Rinse & hold	-	-	-	-	1	-	-

* Tested program for Standard AS/NZS 2007.1:2003

Art. No: 80 776 45 Rev. 02• We reserve the right to make changes. Disclaimer! Not all models contain all the features listed in this manual.
Printed on environmentally-friendly paper which meets the demands of Friends of the Earth and the Swedish Society for Nature Conservation.

CE